Revista Brasileira de Ciências Ambientais
Brazilian Journal of Environmental Sciences

A mobile strategy for water participatory monitoring

Uma estratégia móvel para monitoramento participativo da água

Marcelo Nepomoceno Kapp[1], Bruna Baldasso[1], Giovanna Juliana Ghellere[1], Tassius Nicholas Santos Porfirio[1], Sílvia Sônia da Silva[1], Wagner Ferreira[1], Marcela Boroski[1]

ABSTRACT

The increase in industrialization and urbanization processes has directly affected the quality of water resources worldwide, generating impacts on public health and aggravating the availability of clean water. This study presents AQUA, a mobile application designed as a monitoring tool for urban rivers using colorimetric chemical tests. AQUA enables the analysis and storage of georeferenced data on pollutant levels across specific areas. Tests for ammonia (NH_3-N), orthophosphate (PO_4^{3-}-P), iron, and nitrite (NO_2-N) were miniaturized and submitted to analytical validation, reaching satisfactory values according to the National Institute of Metrology, Quality, and Technology (INMETRO) guidelines, and presenting results comparable with the classic methodologies using UV-VIS spectrophotometer. The limit values of quantification were below the maximum thresholds established by Brazilian law for surface water quality. Nine urban rivers in Foz do Iguaçu (a city in the State of Paraná) were assessed, with high NH_3-N and NO_2-N levels, likely indicating untreated sewage discharges. The generated georeferenced pollution map provides a valuable tool for water quality control in local communities. Overall, this strategy enables participatory water quality monitoring in a cost-effective, flexible, and accessible manner, contributing to Sustainable Development Goal 6 by promoting water availability and sustainable management.

Keywords: contaminants; mobile application; environmental monitoring; on-site detection; geoprocessing.

RESUMO

O aumento dos processos de industrialização e urbanização tem afetado diretamente a qualidade dos recursos hídricos no mundo, gerando impactos na saúde pública e agravando a disponibilidade de água potável. Este estudo apresenta o AQUA, um aplicativo móvel desenvolvido como uma ferramenta de monitoramento para rios urbanos, utilizando testes químicos colorimétricos. O AQUA possibilita a análise e o armazenamento de dados georreferenciados sobre os níveis de poluentes em áreas específicas. Os testes de amônia (NH_3-N), ortofosfato (PO_4^{3-}-P), ferro e nitrito (NO_2-N) foram miniaturizados e submetidos à validação analítica, atingindo valores satisfatórios conforme as diretrizes do Instituto Nacional de Metrologia, Qualidade e Tecnologia (INMETRO), e apresentando resultados comparáveis com as metodologias clássicas por meio do espectrofotômetro UV-VIS. Os valores do limite de quantificação ficaram abaixo dos limites máximos estabelecidos pela legislação brasileira para a qualidade da água superficial. Nove rios urbanos em Foz do Iguaçu foram avaliados, com altos níveis de NH_3-N e NO_2-N, provavelmente indicando descargas de esgoto não tratado. O mapa de poluição georreferenciado gerado fornece uma ferramenta valiosa para o controle da qualidade da água em comunidades locais. No geral, essa estratégia permite o monitoramento participativo da qualidade da água de maneira acessível, flexível e econômica, contribuindo para o Objetivo de Desenvolvimento Sustentável 6 ao promover a disponibilidade de água e a gestão sustentável.

Palavras-chave: contaminantes; aplicativo móvel; monitoramento ambiental; detecção *on site*; geoprocessamento.

[1]Universidade Federal da Integração Latino-Americana – Foz do Iguaçu (PR), Brasil.

Corresponding author: Marcelo Nepomoceno Kapp – Avenida Tancredo Neves, 6731 – CEP: 85867-970 – Foz do Iguaçu (PR). E-mail: marcelo.kapp@unila.edu.br

Conflicts of interest: the authors declare no conflicts of interest.

Funding: This work was supported by the Federal University of Latin America Integration (Unila), Edital n° 191/2021/PRPPG. The authors thank the Araucária Foundation for Support of Scientific and Technological Development of the State of Paraná (Paraná State Government/SETI), and the Coordination for the Improvement of Higher Education Personnel (CAPES), Finance Code 001.

Received on: 04/18/2024. Accepted on: 11/17/2024.

https://doi.org/10.5327/Z2176-94782073

This is an open access article distributed under the terms of the Creative Commons license.

Introduction

Urban rivers often receive pollutants from many anthropic activities, such as domestic and industrial sewage and surface runoff from agricultural areas that encompass a diversity of chemical compounds (Rodrigues et al., 2021). In these environments, water quality monitoring is extremely important to assess the presence of contamination potentially harmful to human health and biodiversity. The occurrences of organic and inorganic compounds in urban rivers have been documented, belonging to emerging classes of contaminants such as pharmaceuticals and their degradation products, personal care and cosmetics products residues, and clandestine industrial effluents, presenting a variable composition (Pivetta and Gastaldini, 2019; Aschale et al., 2021; Zheng et al., 2022).

The analyses of the individual components are of extreme relevance. For example, analyses of the physicochemical composition of nutrients such as ammonia (NH_3), nitrate (NO_3^-), nitrite (NO_2^-), iron (Fe^{3+}), and orthophosphate (PO_4^{3-}) provide preliminary information on the condition of water bodies, and when present in high concentrations, they demand immediate environmental actions (Bell et al., 2017; Nguyen et al., 2019; Zheng et al., 2022). These analyses are performed with high-cost equipment, specialized people, and large amounts of reagent inputs. As an alternative, the reactions can be monitored through colorimetric techniques at low analysis cost. The high concentration of these nutrients can lead to eutrophication, especially in lentic environments (Nygrén et al., 2017).

Recently, several technologies have been developed using mobile applications for monitoring colorimetric reactions. Accessibility and low cost make these tools adequate and indicated to compose low-cost environmental monitoring strategies (Zheng et al., 2022). The use of smartphones allows the capture of images with simultaneous data processing and the source of information on environmental conditions. Digital image colorimetry was carried out by using a smartphone with a custom-made WeChat mini-program and a simple and low-cost analytical kit for nitrite and ammonium quantification (Zheng et al., 2022). The PhotoMetrix PRO® application was developed to be an accessible alternative for capturing digital images and processing analyses that demonstrate satisfactory results (Helfer et al., 2017; Böck et al., 2020; Pedroso et al., 2024), being applied for the analysis of ethanol in brandy (Böck et al., 2018), iron in drinking and natural waters (Lourenço et al., 2020), and chemical oxygen demand in waters (von Mühlen et al., 2022). Quantifications of fluoride ions in drinking water were evaluated with the pre-installed Color Picker Android application to read the output RGB (red, green, blue) values (Yadav et al., 2022). The RGB-based reproducing method for absorption spectra was applied to colorimetric analysis with smartphone-captured digital color images and was used in water quality tests, which determined chemical oxygen demand values, pH values, and the cationic surfactant concentration with success (Inagawa and Uehara, 2020). A Handheld Smartphone Spectrophotometry System (HSSS) was developed to estimate copper and iron concentrations in water samples. The results in samples with unknown concentrations using HSSS were close to the Benchtop Spectrophotometer (Silva et al., 2022). Such strategies have advantages such as mobility, low cost, and no technical training requirements for analysts.

Due to the possibility of using the Global Positioning System (GPS) on smartphones, it becomes possible to build a map associated with different levels of contamination in urban areas. A device that associates GPS, an automated, low-cost electrical conductivity, and temperature measuring device (EC+T Track) associated with the Android platform was developed for water quality monitoring campaigns (Blanco-Gómez et al., 2023). Different smartphone applications for water quality monitoring and citizen science, including EyeOnWater, HydroColor, SecchiApp, bloomWatch, iQwtr, and Lake Observer, have been tested and analyzed, and the development of a new application was evaluated for the purposes of the Interreg Italy-Switzerland (SIMILE) project to monitor lake water quality. It is free and open source, aimed not only at users but also at developers, giving them the possibility of customization (Jovanovic et al., 2019).

In light of this, we developed a monitoring tool for urban rivers using chemical tests to evaluate nitrite, ammonia, orthophosphate, and iron based on colorimetric reactions monitored by a mobile application that we named AQUA. In addition to analyses, the AQUA app can store georeferencing data about levels of these substances in a given area. Thus, the goal is to explore the advantages of smartphone mobility and make citizen participatory monitoring more efficient and comprehensive.

Materials and Methods

The proposed strategy consists of a mobile application and a box for acquiring images of miniaturized analyzes to detect the compounds of interest. Assays are meticulously prepared to avoid handling toxic reagents, putting the analyst or monitoring participant at risk. Figure 1 illustrates the general idea. Initially, the solutions are prepared in the laboratory and sent to the field along with the box and cell phone. Afterward, collaborators collect the water in the river and carry out the analysis in the field, obtaining the results and geographic coordinates. Finally, data can be transmitted and shared between research interest groups.

Box

In addition to the AQUA app, a box was developed to position the samples and capture the images. This box improves image acquisition, avoiding external light variation and keeping the smartphone in a fixed position to create a pattern for image capture. It was built with 15 mm wood and internal measurements of 17 × 25 × 10 cm (Figure 2).

Internally, the box was painted black and the bottom was positioned on Ethylene Vinyl Acetate (EVA) white. A black painted lid was also set up by a metallic hinge. Inside the box, a support was arranged to fit the test tube, which had 2 mm in diameter. A 12 V LED strip was

positioned on the upper internal part of this support. More specifically, 40 cm of LED strip divided into eight pieces of 5 cm was installed on the upper internal perimeter to have uniform lighting. A 9 V rechargeable battery was embedded as source power.

The AQUA application

The methodology used to develop the AQUA app was the Unified Process model, a generic infrastructure created to support the development of software projects. This process was adopted to allow effective project management, having the following Booch, Rumbaugh and Jacobson's (1998) phases: 1. Conception: the scope of the project, its requirements, and objectives are established in this phase; 2. Elaboration: it creates a project plan for the system and eliminates the highest risk parts of the project; 3. Construction: the application is developed in this step; and 4. Transition: the software is applied by the user community, so the application may require adjustments and correct problems, among others. The Unified Modeling Language (UML) was systematically used to carry out these application planning steps. There are several UML structural diagrams, such as use case, class, package, component, sequence, and interaction diagrams, etc. The use case diagram is necessary to organize and model a system's operation. Figure 3 shows the use case diagram developed based on previously identified functional requirements, where one can see the desired functionality for the application from the user perspective and the monitoring system as a whole.

The programming language used to implement the application was Java on the Android Studio platform, which is Google's official platform for Android applications. The SQLite library was used as a Database Management System and the OpenCV library for image processing purposes. In addition, the application was developed in Android version 11 and required smartphones with a camera of at least 5 MP (megapixels) for its best use.

AQUA application functioning

One of the major development concerns of the application was to make its use simple, friendly, and intuitive for the user. Herein, we present some of the application's screens and interface, which were built using the Android Studio platform for the Pixel 3A cell phone. For example, Figure 4A shows the initial screen of the application where the user logs in. If someone clicks on New User (*Novo Usuário*), another screen opens, where basic information about the user can be fulfilled.

Figure 1 – Overview of the proposed methodology.

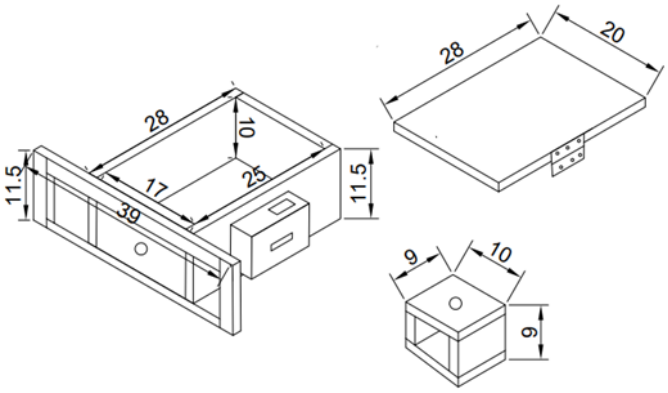

Figure 2 – Smartphone colorimetric box.

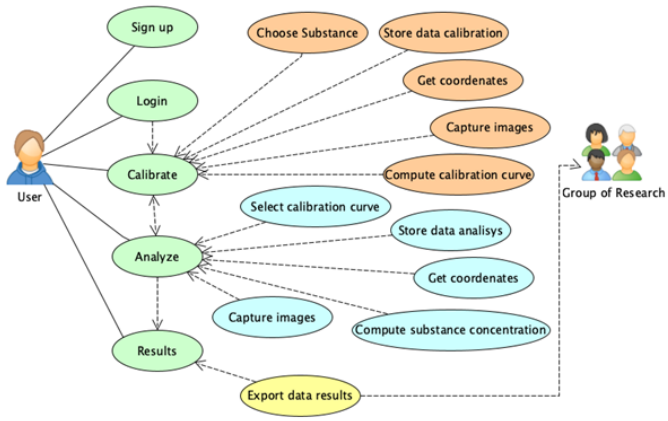

Figure 3 – Use case diagram of the developed smartphone application.

When a user logs in, the main screen becomes available with the buttons: calibration (*calibragem*), analyses (*analyses)*, results (*resultados*), about (*sobre*), and exit (*sair*), as it is shown in Figure 4B.

By pressing the calibration button, the application is taken to the screen shown in Figure 4C, on which the user chooses a substance and inserts the analysis location and the water temperature if desired. The number of samples is fixed at six and the region of interest at 48x48 pixels. It obtains the coordinates and the calibration date automatically, considering the relevance of the data for participatory monitoring. After entering the data, the user can press the capture sample button. The application displays the capture calibration screen. Figure 4D illustrates the photo capture screen for the six calibration samples and the list with their thumbnails. Once the calibration is done, the user can press the analysis button on the main screen. Then, the application will list the calibrations performed and their corresponding coefficients of determination (R^2), date, and place.

When choosing the desired calibration, the user observes the calibration curve of that analysis. Then, when pressing the process button on the screen, the application is led to capture photos of the chosen analysis. Finally, the user can monitor or export all obtained results by pressing the result button on the main screen. Figure 5 shows a comprehensive overview of the proposed mobile strategy for participatory

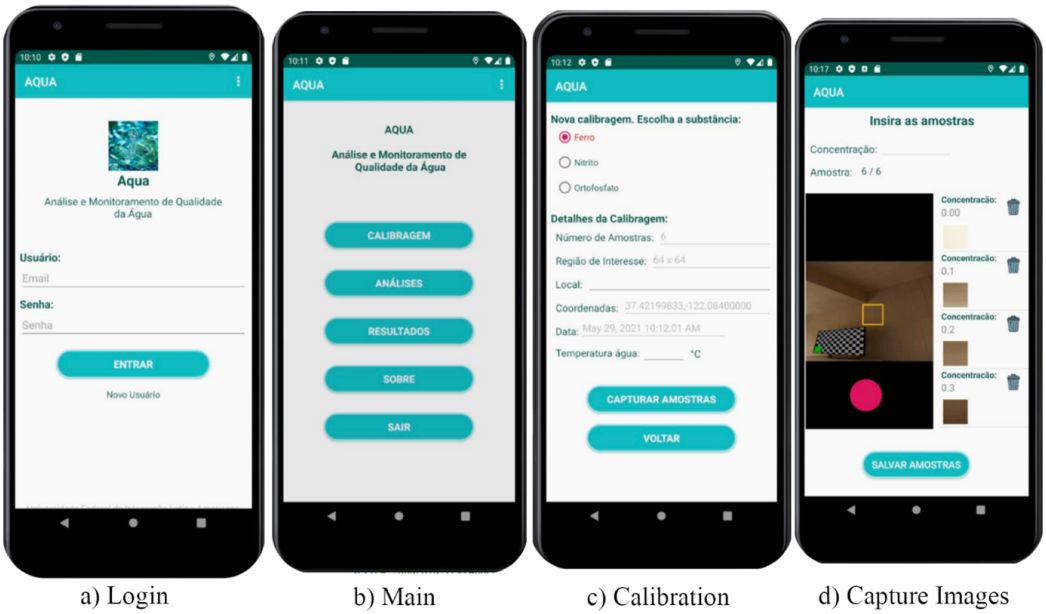

a) Login b) Main c) Calibration d) Capture Images

Figure 4 – Some screens of the AQUA smartphone application.

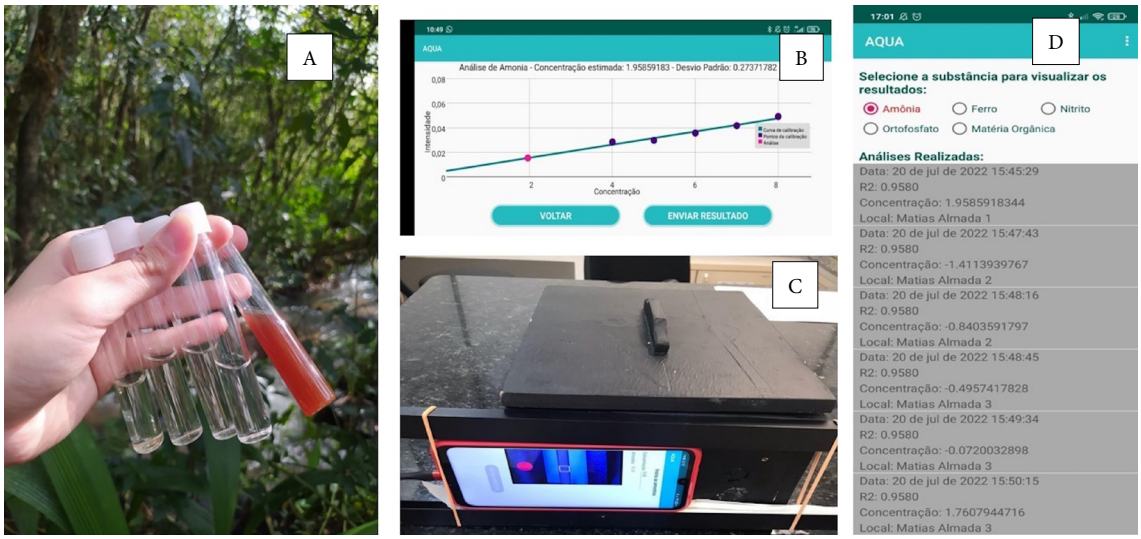

Figure 5 – Graphical overview of the proposed mobile strategy.

monitoring, samples of test tubes (a), a plot chart with an analysis result and the corresponding analytic curve used for calibration (b), the box embedded with a smartphone and the AQUA capture image screen (c), and finally, the AQUA calibration screen showing a list of previous performed calibrations.

Digital image acquisition and processing method

A monochrome image is a continuous two-dimensional function *f*(*x*,*y*), in which *x* and *y* are spatial coordinates and the value of *f* at any point (*x*,*y*) is proportional to the luminous intensity at the point considered. Each point on the two-dimensional grid representing the digital image is called a pixel. As computers or smartphones are not capable of processing continuous images, only arrays of digital numbers, it is necessary to represent images as two-dimensional arrays of pixels of size (*M*x*N*). Therefore, if the digital image contains *M* rows and *N* columns, the index *x* will vary from 0 to *M*-1, while *y* will vary from 0 to *N*-1. In an RGB color digital image, a pixel can be seen as a vector whose components represent the red, green, and blue intensities of its color. The color image can be seen as a composite of three monochromatic images, i.e. (Equation 1):

$$f(x,y) = f_R(x,y) + f_G(x,y) + f_B(x,y) \tag{1}$$

Where:
fR(*x*,*y*) = luminous intensities of the red components of the image at pixel (*x*,*y*);
fG(*x*,*y*) = luminous intensities of the green components of the image at pixel (*x*,*y*); and
fB(*x*,*y*) = luminous intensities of the blue components of the image at pixel (*x*,*y*).

The acquisition of images by the application establishes a 64x64 region of interest, so *M*=*N*=64. Thereafter, it computes average values $\bar{f}_R$, $\bar{f}_G$, $\bar{f}_B$ for each RGB channel such as described in Equations 2, 3, and 4, respectively:

$$\bar{f}_R = \frac{\sum_{x=0}^{M-1}\sum_{y=0}^{N-1} f_R(x,y)}{M \times N} \tag{2}$$

$$\bar{f}_G = \frac{\sum_{x=0}^{M-1}\sum_{y=0}^{N-1} f_G(x,y)}{M \times N} \tag{3}$$

$$\bar{f}_B = \frac{\sum_{x=0}^{M-1}\sum_{y=0}^{N-1} f_B(x,y)}{M \times N} \tag{4}$$

After that, the average $\bar{f}_{RGB}$ of the RGB values (Equation 5) and the RGB vector $\| \bar{f}_{RGB} \|$ is also determined, which is calculated as the norm of the average values of each channel (Equation 6).

$$\bar{f}_{RGB} = \frac{\bar{f}_R + \bar{f}_G + \bar{f}_B}{3} \tag{5}$$

$$\| \bar{f}_{RGB} \| = \frac{\sqrt[2]{\bar{f}_R{}^2 + \bar{f}_G{}^2 + \bar{f}_B{}^2}}{3} \tag{6}$$

As the sample is in a translucent container, there may be light losses due to reflection, scattering, and even absorption by the box. To determine the intensity of each image sample *s* , it is necessary to consider the interaction of light with matter. Therefore, in order for these losses to be balanced, the amount of light absorbed is related to an identical sample that, by contrast, has only the solvent called blank *b* (Gomes et al., 2008). Taking this into account, the following absorbance (i.e. intensity) equation is obtained:

$$A = \log\left(\frac{L(b)}{L(s)}\right) \tag{7}$$

Where:
A = absorbance;
L = amount of light;
s = image sample; and
b = blank solvent.

For this reason, in order to calculate the intensity I(.) of the images obtained both in the calibration and in the analysis, Equation 7 was adapted for each channel RGB and measure computed above, where $K = \{R, G, B, \bar{f}_{RGB}, \| \bar{f}_{RGB} \|\}$. The resulting calculation is summarized for an image sample s in Equation 8:

$$I_K(s) = \log\left(\frac{\bar{f}_K(b)}{\bar{f}_K(s)}\right) \tag{8}$$

Digital processing method for calibration

The calibration curve is determined by creating a mathematical model via linear regression involving data from concentration *ci* and intensities $I_k(.)$ of a sample image *si*. Therefore, the model is built as shown in Equation 9. The angular and linear coefficients β and α are computed according to Equations 10 and 11.

$$c_i = \alpha I_K(s_i) + \beta \tag{9}$$

$$\beta = \frac{\sum_{x=1}^{n}\left(\left(I_K(s_i) - \overline{I_K}(S)\right) * (c_i - \bar{C})\right)}{\sum_{x=1}^{n}\left(I_K(s_i) - \overline{I_K}(S)\right)^2} \tag{10}$$

$$\alpha = \bar{C} - \beta \overline{I_K}(S) \tag{11}$$

Where:
i = image index from a set of *n* samples, i.e. $S=s_1,s_2,\ldots,s_n$, and their respective concentrations $C=c_1,\ldots,c_n$ for a given calibration process;
$\bar{C}$ = averages of the concentrations; and
$\overline{I_K}(.)$ = averages of the intensities.

Analytic curves are computed from intensities for each color channel (RGB) and component (XY). The curve that produces the best fit,

that is, with the highest R^2 is selected and saved in the calibration process for a given substance. R^2 is calculated as follows (Equation 12):

$$R^2 = \frac{\sum_{x=1}^{n}\left(\left(I_K(s_i)-\overline{I_K}(S)\right)*c_i\right)}{\sum_{x=1}^{n}\left(\left(I_K(s_i)-\overline{I_K}(S)\right)^2\times\sum_{x=1}^{n}(c_i-\bar{C})^2\right)} \quad (12)$$

In the end of the calibration process, the application saves all data and presents the graph with the calibration points, the analytic curve, and the R^2 computed.

Digital processing method for analysis

The processing of the analysis is performed in two phases. At first, the user takes *n* pictures of the same sample. Then, a calibration is selected to estimate the concentration value of a given substance. For example, if the best fitting calibration curve was set by the RGB vector, the equation of this line will be used to obtain the concentration values of the sample to be analyzed. As a result, the concentration of the sample is obtained by the average of the concentrations estimated for each image, as shown in Equation 13.

$$\bar{C} = \frac{\sum_{x=1}^{n} C(s_i)}{n} \quad (13)$$

Finally, in order to verify the data dispersion between the image samples, the standard deviation σ is computed as in Equation 14.

$$\sigma = \sqrt{\frac{1}{n-1}\sum_{i=1}^{n}\left(c_i - \bar{C}\right)^2} \quad (14)$$

Reagents and Materials

For the experiments, distilled water obtained from ultra-purifier (Reservoir 25 L, Elga), analytical balance (ATY224, Marte Científica), and UV-VIS spectrophotometer (Evolution 201, Thermo Scientific) were used.

Ammonia

The Nessler method was employed according to Lindner (1944), modifying the reagent which was produced from 20 g of mercuric iodide (CAS 77474-29-0, Dynamic, P.A.), 14 g of potassium iodide (CAS 7681-11-0, Neon, P.A.), diluted in 20 mL of distilled water. The mixture was slowly added to a beaker containing 32 g of sodium hydroxide (CAS 1310-73-2, Neon, ≥ 97.0%) diluted in 100 mL of distilled water. The contents of the beaker were transferred to a 250 mL volumetric flask and its volume was checked with distilled water. For the ammonia stock concentration, a solution of 500 mg L^{-1} of ammonium chloride (CAS 12125-02-09, Neon, P.A.) was prepared.

This solution was diluted to 50 mg L^{-1}. That intermediate solution is equivalent to a concentration of 13.09 mg L^{-1} of ammonia as nitrogen (NH_3-N). From this, the analytical curve points were prepared at concentrations from 0.45 to 2.24 mg L^{-1}. For intermediate precision and repeatability, solutions were prepared at concentrations of 0.45; 1.35; and 2.24 mg L^{-1}. After being transferred to the tubes, 0.25 mL of Nessler reagent was added, and the reading was performed with a spectrophotometer at 425 nm. In order to carry out the analysis of the samples, 5 mL of the samples were pipetted in triplicate and 0.25 mL of Nessler reagent was added. Thereafter, the reading was continued at 425 nm for 10 min.

Iron

Iron analysis was performed according to the methodology of complexation with thiocyanate, recently published by the research group (Lourenço et al., 2020). A hydrochloric acid solution (CAS 7647-01-0, Sigma, P.A.) was prepared at the concentration of 0.10 mol L^{-1}. The iron solution was prepared from iron chloride hexahydrate (CAS 10025-77-1, Neon, P.A.), and hydrochloric acid 0.10 mol L^{-1} was used as the solvent. This solution was diluted to 10 mg L^{-1} and used to build the analytical curve points from 0.33 to 2.33 mg L^{-1} in test tubes.

Potassium thiocyanate was prepared at the concentration of 0.10 mg L^{-1}. For intermediate precision and repeatability, iron solutions of 0.33; 1.00; and 2.33 mg L^{-1} were prepared. In each tube, 2 mL of potassium thiocyanate solution was added, and 10 min waited for reading at 475 nm. For the analyses, 5 mL of the sample was used in triplicate in a test tube and 2 mL of the thiocyanate solution was added. The reading proceeded in the same way as in the previous tubes.

Nitrite

The methodology for the analysis of nitrite was adapted according to section 4500 - NO2 - B of the Standard Methods for the Examination of Water and Wastewater (APHA, 2017), with the modifications described below. The method is based on the formation of a pink-colored complex from the reaction of nitrite with the colored reagent, which was produced from a mass of 1.2 g of sulfanilamide (CAS 63-74-1, Synth, P.A.) and 17.0 mL of phosphoric acid (CAS 7664-38-2, Neon, 85% v/v), dissolved in 160 mL of distilled water in a 200 mL volumetric flask. After dissolution, 0.199 g of N-(1-naphthyl)-ethylenediamine dihydrochloride (CAS 1465-25-4, Dinâmica, P.A.) was added and the volume of the 200 mL flask was checked with distilled water.

A stock solution of sodium nitrite (CAS 7632-00-0, Neon, P.A.) at 61.49 mg L^{-1} was prepared. This sodium nitrite solution (61.49 mg L^{-1}) is equivalent to a concentration of 12.48 mg L^{-1} of nitrite as nitrite (NO_2-N). For the construction of the analytical curve, solutions were prepared from the dilution of the stock solution, in concentrations from 0.048 to 0.240 mg L^{-1} of NO_2-N. For repeatability and intermediate precision, solutions were prepared at concentrations of 0.096; 0.144; and 0.192 mg L^{-1} of NO_2-N. The solutions were prepared in 5 mL flasks and transferred to a test tube, and 0.20 mL of colored reagent was added to each tube. After 10 min, the solutions were monitored at a wavelength of 543 nm. In triplicate, 5 mL of sample was pipetted directly into the test tube and 0.20 mL of the colored reagent was added. Thereafter, the sample was read at 543 nm after 10 min.

Orthophosphate

The orthophosphate analysis was performed according to Method A - NBR 12772 (ABNT, 1992) with the modifications described below. The standard orthophosphate solution was prepared at a concentration of 50 mg L^{-1} potassium phosphate monobasic (CAS 7778-77-0, Neon, P.A.). This solution was diluted to 1.25 mg L^{-1}. That intermediate solution is equivalent to a concentration of 0.28 mg L^{-1} of orthophosphate as total phosphorus (PO_4^{3-}-P). From this, the analytical curve points were prepared at concentrations from 0.021 to 0.15 mg L^{-1}. The reagent that colored the analyte was prepared from 0.013 g of potassium antimony tartrate (CAS 7732-18-5, Alphatec, P.A.) and 0.559 g of ammonium molybdate (CAS 12027-67-7, P.A.) dissolved in 70 mL of distilled water. A 7 mL concentrated sulfuric acid was added and after cooling, the solution was transferred and measured in a 100 mL flask, denoted Solution A. To complete the preparation of the colored reagent, 0.05 g of ascorbic acid was dissolved (CAS 50-81-7, Neon, P.A.) in 10 mL of Solution A.

The analytical curve points were prepared from the standard orthophosphate solution in 5 mL volumetric flasks at concentrations of 0.021 to 0.15 mg L^{-1} of PO_4^{3-}-P. To determine intermediate precision and repeatability, the concentrations used were 0.021; 0.084; and 0.146 mg L^{-1} (PO_4^{3-}-P). To each solution, transferred to a test tube, 1 mL of the colored reagent was added. Each tube had its color analyzed at 880 nm. For the samples, 5 mL was pipetted in triplicate and 1 mL of the colored reagent was added to each tube. They were analyzed at the same wavelength as validation tubes containing the same analyte. All records were performed after waiting 10 min.

Validation of methodologies

After adapting the applied methodologies, the validation stage was conducted, focusing on the linearity parameters of the analytical curve, limit of detection (LOD), and limit of quantification (LOQ), repeatability, and intermediate precision. Within each parameter, the tests were monitored using the AQUA app and the UV-VIS spectrophotometer, for comparative purposes. To build the analytical curve, six concentrations were prepared in triplicate. In order to evaluate the LOD and LOQ in UV-VIS spectrophotometer, seven replicates of the first analytical curve point were prepared under the same conditions, being determined three and ten times the signal/noise, for LOD and LOQ, respectively. In the AQUA app the standard deviation was provided by seven replicates of the analytical blank monitored after generating the curve, being determined three and ten times the signal/noise, for LOD and LOQ, respectively. In order to evaluate the repeatability and intermediate precision, the analysis was performed at three points in triplicate and estimated based on the relative standard deviation (RSD%) (INMETRO, 2020).

Data georeferencing

Nine urban rivers were chosen in Foz do Iguaçu, Paraná State. Sampling collections occurred in July and August 2022, named Mathias Almada, Tamanduazinho, Claro, Arroio Dourado, Tamanduá, M'Boicy, Arroio Jupira, Monjolo, and Arroio Pé Feio. The rivers are classified mainly as Class 3 and are intended to supply human consumption (after treatment), irrigation of trees, cereal and forage crops, amateur fishing, secondary contact recreation, and watering animals (Brasil, 2005). The points where the samples were collected and the analysis carried out in the AQUA app were geographically located by the application and, with the help of these coordinates, it was possible to build a map of these locations in the Quantum Geographic Information System (QGIS). The analyses were carried out in triplicate and before and after their performance, a blank analysis (deionized water) was conducted in order to detect and correct any possible experimental error. The same samples were read using a spectrophotometer. Additionally, hydrogenionic potential (pH), dissolved oxygen (DO), total dissolved solids (STD), oxidation/reduction potential (ORP), and turbidity parameters were collected using a multiparameter probe (Series U-50, Horiba).

Results and Discussion

When changing, adapting, or optimizing a scientifically accredited methodology, it is necessary to undergo the validation process to ensure its effectiveness. Table 1 presents the validation data of the methodologies evaluated in this study and the limits established by the Brazilian legislation for water bodies (Class 3) (Brasil, 2005) and the European Union (UE, 2020).

The LOD and LOQ of the methodologies when monitored with the AQUA app were higher than the values obtained by the spectrophotometer, for all the methodologies, except for iron. LOQ was lower than the legislation limits for all the parameters and became a satisfactory analysis to evaluate water quality. The R^2 presented higher values for analytical curves in the UV-VIS spectrophotometer than in the AQUA app. The equipment possesses a proper optical system with a dispersion device that separates the broadband radiation into specific wavelengths and is also built to avoid scattering radiation. Even though a smartphone colorimetric box (Figure 2) was developed as an improvement for image capture, the UV-VIS spectrophotometer presented better results. All the analytical curves obtained by the AQUA app showed R^2 higher than 0.970, except for orthophosphate, which was 0.942. Probably, the reason was the solution color that made it difficult for the AQUA app to differentiate between the analytical curve levels in lower concentrations. The precision limits showed RSD values lower than 10% for the repeatability estimate for all methodologies monitored by UV-VIS spectrophotometer and lower than 14% when monitored by the AQUA app. For the estimation of intermediate precision, the values were higher, showing that the same analysis, when performed at different times, may be influenced by characteristics that differ in the application methodology. For example, the test tube used to facilitate the application of the method can be made of a material

with small variations in thickness, affecting the registration of the color of the solution in the tube, while in the UV-VIS, the cuvettes are made of quartz under strict standardization. Another feature of the applied methodology that can affect the intermediate precision is the supply of 12 V batteries since they can reduce the intensity of the illumination over time. On the other hand, the alternating current supply guarantees the continuous intensity of the equipment in the UV-VIS.

Urban river monitoring system

The application proved to be intuitive and easy to use. The manipulation of the miniaturized assays was easy to perform. They required pipetting a pre-established amount of water sample into previously prepared test tubes, which contained the necessary reagents for each methodology. Table 2 presents the physical-chemical results obtained with the multiparametric probe, AQUA, and UV-VIS spectrophotometer for the analysis of urban rivers.

In the Monjolo River, the AQUA app could detect the presence of ammonia, in line with the data obtained by the UV-VIS spectrophotometer, being close to the maximum value obtained in the legislation (13.3 mg L^{-1} NH_3-N for pH ≤ 7.5). High ammonia values were observed in polluted urban rivers, with concentrations ranging from 0.025 to 11.28 mg L^{-1} (Nguyen et al., 2019).

Ammonium ions can become toxic in alkaline waters, which are inappropriate for fish communities (Nguyen et al., 2019). Nitrite and ammonia ions are easily oxidized into nitrate in aerobic environments, such as those observed in the analyzed urban rivers, considering the high values reached for dissolved oxygen (Table 2). Nitrate ions are difficult to remove in water treatment networks for human consumption, and also, high levels of nitrate (above 10 mg L^{-1}) can harm livestock or children (Nguyen et al., 2019). Regarding the nitrite ion, values from 0.030 to 0.36 mg L^{-1} of nitrite as nitrogen (NO_2-N) were determined using the AQUA app, with higher values obtained for M'Boicy and Monjolo rivers, although lower than those allowed by law (above 1.0 mg L^{-1} NO_2-N). Other works have shown the presence of nitrite ions in urban rivers, ranging from 0.003 to 0.330 mg L^{-1} (Nguyen et al., 2019).

Iron levels ranged from 0.51–0.99 mg L^{-1} monitored by the AQUA app, while, for the same samples, iron values were detected. LOQ values using a UV spectrophotometer were 0.50 mg L^{-1}. All the values obtained are below the legislation limits (5.0 mg L^{-1}) (Brasil, 2005).

Table 1 – Validation parameters for water quality assessment using the AQUA application and UV-VIS.

Analysis	Parameters	AQUA App	UV-VIS	Range	CONAMA no. 357	DIR. 2020/ 2184/EU
Ammonia [NH_3-N]	LOD (mg L^{-1})	0.110	0.082	0.450–2.240 mg L^{-1}	13.3 mg L^{-1} for pH ≤ 7.5; 5.6 mg L^{-1} for 7.5 < pH ≤ 8.0; 2.2 mg L^{-1} for 8.0 < pH ≤ 8.5; 1.0 mg L^{-1} for pH > 8.5	0.410 mg L^{-1}
	LOQ (mg L^{-1})	0.35	0.25			
	R^2	0.970	0.998			
	IP (RSD%)	9.89	5.23			
	REP (RSD %)	11.30	2.15			
Iron	LOD (mg L^{-1})	0.040	0.150	0.330–2.330 mg L^{-1}	5.0 mg L^{-1}	0.200 mg L^{-1}
	LOQ (mg L^{-1})	0.14	0.50			
	R^2	0.987	0.995			
	IP (RSD%)	2.17	3.48			
	REP (RSD%)	15.08	3.72			
Nitrite [NO_2-N]	LOD (mg L^{-1})	1.110 x 10^{-3}	1.148 x 10^{-4}	0.048–0.240 mg L^{-1}	1.0 mg L^{-1}	0.152 mg L^{-1}
	LOQ (mg L^{-1})	3.35 x 10^{-3}	4.48 x 10^{-4}			
	R^2	0.973	0.999			
	IP (RSD%)	12.82	6.08			
	REP (RSD%)	12.50	6.74			
Orthophosphate [PO_4^{3-}-P]	LOD (mg L^{-1})	6.80 x 10^{-3}	2.93 x 10^{-3}	0.021–0.150 mg L^{-1}	0.15 mg L^{-1}	-
	LOQ (mg L^{-1})	0.0206	8.8800 x 10^{-3}			
	R^2	0.942	0.997			
	IP (RSD%)	13.88	7.09			
	REP (RSD%)	12.78	6.10			

App: application; UV-VIS: ultraviolet-visible; CONAMA: Brazilian National Environment Council; NH_3-N: ammonia concentration as nitrogen; NO_2-N: nitrite concentration as nitrogen; PO_4^{3-}P: orthophosphate concentration as phosphorus; LOD: limit of detection; LOQ: limit of quantification; R^2: coefficient of determination; IP: intermediate precision; REP: repeatability; RSD: relative standard deviation; - not informed.

Table 2 – Results of water quality in urban rivers in the municipality of Foz do Iguaçu (Paraná State).

Parameters	M'Boicy	Mathias Almada	Arroio Dourado	Tamanduazinho	Tamanduá	Arroio Pé Feio	Monjolo	Arroio Jupira	Claro
Multiparametric probe									
pH	7.59	7.98	7.00	6.25	6.82	7.31	7.28	7.31	7.10
DO (mg L^{-1})	9.83	9.81	12.42	9.46	13.17	17.51	10.56	17.51	9.47
STD (g L)	0.23	0.10	0.04	0.05	0.04	0.06	0.25	0.06	0.02
ORP (mV)	191.00	248.00	245.00	165.00	152.00	114.00	180.00	114.00	158.00
Turbidity (NTU)	8.00	9.30	12.40	12.60	11.20	7.30	12.40	7.30	15.30
AQUA application									
Ammonium (NH_3-N)	1.66	1.83	3.39	2.98	0.93	1.81	10.53	ND	ND
Iron	ND	0.87	0.51	0.99	D	ND	ND	ND	ND
Nitrite (NO_2-N)	0.36	0.03	0.04	0.11	ND	ND	0.25	ND	ND
Phosphate (PO_4^{3-}-P)	0.04	0.02	0.04	0.11	ND	0.02	0.09	ND	ND
UV-VIS Spectrophotometer									
Ammonium (NH_3-N)	4.33	0.68	0.66	0.58	0.84	3.08	19.12	0.63	0.55
Iron	ND	D	D	D	D	ND	ND	ND	ND
Nitrite (NO_2-N)	0.14	0.02	ND	ND	ND	ND	0.24	ND	ND
Phosphate (PO_4^{3-}-P)	0.05	0.02	ND	ND	ND	0.02	0.07	ND	ND

pH: hydrogenionic potential, DO: dissolved oxygen, STD: total dissolved solids, ORP: oxidation/reduction potential; NTU: nephelometric turbidity unit; UV-VIS: ultraviolet-visible; NH_3-N: ammonia as nitrogen; NO_2-N: nitrite as nitrogen; PO_4^{3-}P: orthophosphate as phosphorus; ND: not detected, D: detected below the limit of quantification.

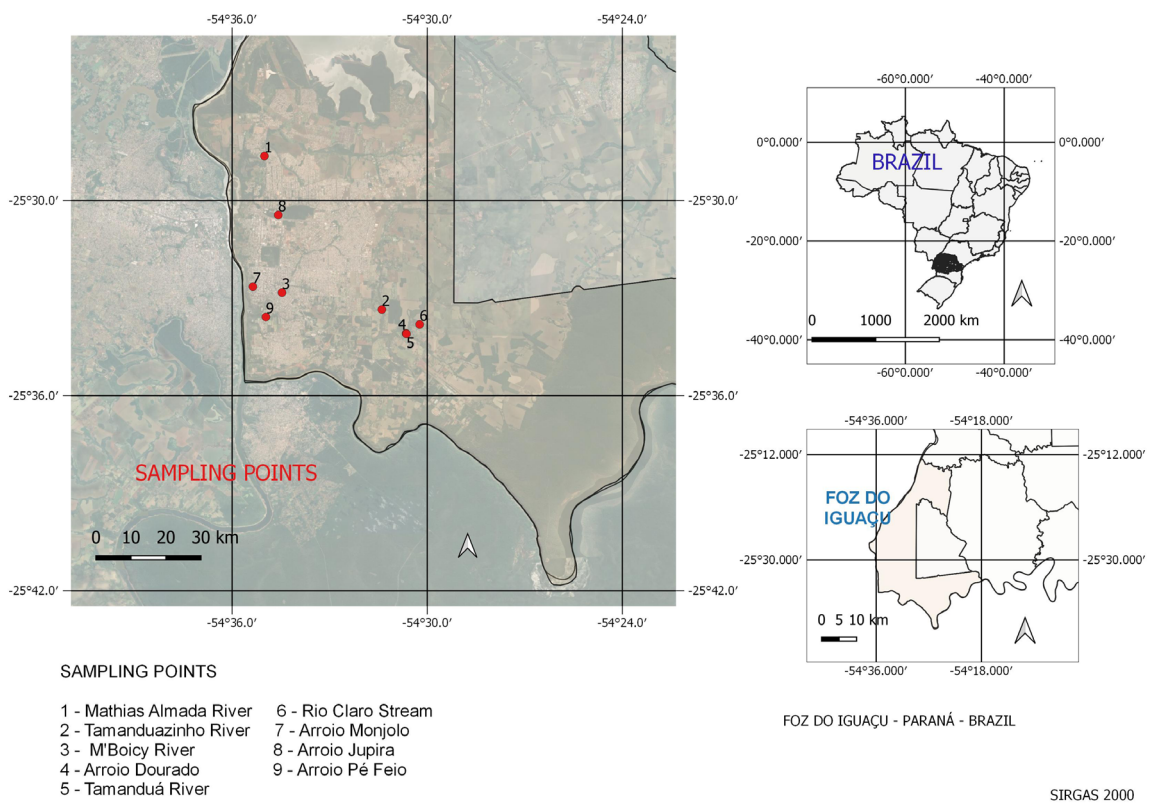

Figure 6 – Maps produced from the AQUA geographic coordinates.

In the orthophosphate analysis, all higher values obtained for M'Boicy and Monjolo rivers were within the maximum allowed by law (0.15 mg L^{-1}) (Brasil, 2005). From the mapped points, a collection location map was produced, as shown in Figure 6. Correspondence was observed between the points where the collections were carried out and the geographic coordinates obtained by the application, which proves the application's spatial location efficiency. It was proved that the proposed mobile strategy works in loco on the banks of the analyzed rivers. In addition, this study showed that the spatial location was successful and demonstrated the possibility of using the monitoring system developed in other urban rivers. With the use of the AQUA app, it was possible to delineate the areas of greatest pollution among the related urban rivers, making it possible to investigate *in situ* untreated sewage discharges and inform in real time the presence of contaminants. Considering the data obtained, the Monjolo and M'Boicy rivers showed a high content of total dissolved solids monitored by the multiparametric probe. These two rivers have an intense urban occupation in their surroundings (Figure 6). On the other hand, the rivers Tamanduazinho, Claro, Arroio Dourado, and Tamanduá have a low impact of the urban area.

Conclusions

All work ranges used during the validations were adjusted to remain within the variation proposed by the methodology, with values in agreement with the limit established by Resolution No. 357 of the Brazilian National Environment Council (CONAMA). The use of the AQUA application and the apparatus (box) employed to capture images, brought a new possibility for environmental monitoring. Mainly participatory monitoring that includes schools, riverside communities, and enthusiasts in general in a cheap and easy way to operate. From the data obtained in the validation process, it is discernible that it is unfair to compare directly the concentration values obtained by both methodologies. Of course, while the spectrophotometer is a robust and highly effective equipment in the analytical quantification process, the AQUA app brings an idea of the detection of compounds and classification of the order of pollution within a group of rivers or evaluated samples. However, we indeed make that comparison to having an idea of how precise our mobile strategy could be regarding that equipment. It is possible, through the application, to detect which samples are above the limit established by CONAMA and which are suitable for human consumption in its most diverse forms, according to the established class.

Contribution of authors

Kapp, M.N.: conceptualization, data curation, formal analysis, investigation, methodology, writing – original draft, writing – review & editing. **Baldasso**, B.: conceptualization, data curation, formal analysis. **Ghellere**, G.J.: conceptualization, data curation, formal analysis, investigation, methodology, writing – original draft. **Porfirio**, T.N.S.: formal analysis, investigation, methodology. **Silva**, S.S.: conceptualization, data curation, formal analysis, investigation, methodology, writing – original draft. **Ferreira**, W.: investigation, methodology. **Boroski**, M.: conceptualization, data curation, formal analysis, investigation, methodology, writing – original draft, writing – review & editing, project administration, resources.

References

American Public Health Association (APHA), 2017. Standard Methods for the Examination of Water and Wastewater. 26th ed. AWWA, WPCF, Washington, D.C. (Accessed March 01, 2023) at:. https://www.standardmethods.org/doi/book/10.2105/SMWW.2882

Aschale, M.; Sileshi, Y.; Kelly-Quinn, M.; Hailu, D., 2021. Multivariate analysis of potentially toxic elements in surface waters in Ethiopia. Applied Water Science, v. 11 (5), 1-13. https://doi.org/10.1007/s13201-021-01412-6.

Associação Brasileira de Normas Técnicas (ABNT), 1992. NBR 12772: Água - Determinação de fósforo - Método de ensaio. ABNT/CEE Comissão de Estudo Especial, Rio de Janeiro, 9 p.

Bell, C.D.; McMillan S.K; Clinton, S.M.; Jefferson, A.J., 2017. Characterizing the effects of stormwater mitigation on nutrient export and stream concentrations. Environmental Management. v. 5910 (4), 604-618. https://doi.org/10.1007/s00267-016-0801-4.

Blanco-Gómez, P; Jiménez-García, J.L; Cecilia, J.M., 2023. Low-cost automated GPS, electrical conductivity and temperature sensing device (EC + T Track) and Android platform for water quality monitoring campaigns. HardwareX, v. 13, e00381. https://doi.org/10.1016/j.ohx.2022.e00381.

Böck, F.C.; Helfer, G.A; Costa, A.B; Dessuy, M.B. Ferrão, M.F., 2018. Rapid determination of ethanol in sugarcane spirit using partial least squares regression embedded in smartphone. Food Analytical Methods, v. 11 (4), 1951-1957. https://doi.org/10.1007/s12161-018-1167-4.

Böck, F.C.; Helfer, G.A.; Costa, A.B.; Dessuy, M.B.; Ferrão, M.F., 2020 . PhotoMetrix and colorimetric image analysis using smartphones. Journal Of Chemometrics (Online), v. 34 (12), 1-19. https://doi.org/10.1002/cem.3251.

Booch, G.; Rumbaugh, J.; Jacobson, I., 1998. The unified modeling language user guide. Addison Wesley, Berkeley, California, 512 p

Brasil, 2005. Conselho Nacional do Meio Ambiente (CONAMA). Resolução CONAMA nº 357, de 17 de março de 2005. Diário Oficial da União, Brasília.

Gomes, M.S.; Trevizan, L.C.; Nóbrega, J.A.; Kamogawa, M.Y., 2008. Uso de scanner em espectrofotometria de absorção molecular: aplicação em experimento didático enfocando a determinação de ácido ascórbico. Química Nova, v. 31 (6), 1577-1581. https://doi.org/10.1590/S0100-40422008000600050.

Helfer, G.A.; Magnus, V.S.; Böck, F.C.; Teichmann, A.; Ferrão, M.F.; da Costa, A.B., 2017. PhotoMetrix: an application for univariate calibration and principal components analysis using colorimetry on mobile devices. Journal of the Brazilian Chemical Society, v. 28 (2), 328-335. https://doi.org/10.5935/0103-5053.20160182.

Inagawa, A.; Uehara, N., 2020. Development of colorimetric analysis with smartphones-captured images based on RGB-spectrum conversion methods. Bunseki Kagaku, v. 69 (12), 693-706. https://doi.org/10.2116/bunsekikagaku.69.693.

Instituto Nacional de Metrologia, Normalização e Qualidade Industrial (INMETRO), 2020. DOQ-CGCRE-008 Rev.09 – Orientação sobre validação de métodos analíticos - junho, 2020 (Accessed March 01, 2023) at:. http://www.inmetro.gov.br/sidoq/arquivos/cgcre/doq/doq-cgcre-8_09.pdf

Jovanovic, S.; Carrion, D.; Brovelli, M.A., 2019. Citizen Science for water Quality Monitoring Applying Foss. The International Archives of the Photogrammetry, Remote Sensing and Spatial Information Sciences, v. XLII-4/W14, 119-126. https://doi.org/10.5194/isprs-archives-XLII-4-W14-119-2019.

Lindner, R.C.,1944. Rapid analytical method for some of the more common inorganic constituents of plants tissues. Plant Physiology, v. 19 (1), 76-89. https://doi.org/10.1104/pp.19.1.76.

Lourenço, E.C.; Paula, S.; Setti, G.O.; Toci, A.T.; Padilha, J.C.; Silva, E.M; Boroski, M., 2021. Determinação do teor de ferro utilizando o aplicativo Photometrix Pro®: a tecnologia a favor do ensino de química. Revista Virtual de Química, v. 13 (1), 192-206.

Nguyen, K.T.; Nguyen, H.M.; Truong, C.K.; Ahmed, M.B.; Huang, Y.; Zhou, J., 2019. Chemical and microbiological risk assessment of urban river water quality in Vietnam. Environ Geochem Health v. 41 (16), 2559-2575. https://doi.org/10.1007/s10653-019-00302-w.

Nygrén, N.A.; Tapio, P.; Horppila, J., 2017. Will the Oxygen-Phosphorus Paradigm Persist? – Expert Views of the Future of Management and Restoration of Eutrophic Lakes. Environmental Management v. 60, 947-960. https://doi.org/10.1007/s00267-017-0919-z.

Pedroso, D.Q.; Knaul, L.E.; Kapp, M.N.; Goncalves, C.C.S.; Boroski, M., 2024. Using smartphone for monitoring colorimetric reactions aiming at determining antioxidant activity. Food Science and Technology, v. 44, e00198. https://doi.org/10.5327/fst.00198.

Pivetta, G.G.; Gastaldini, M.C.C., 2019. Presence of emerging contaminants in urban water bodies in southern Brazil. Journal of Water and Health, v. 17 (2), 329-337. https://doi.org/10.2166/wh.2019.092.

Rodrigues, J.A.; Silva, S.; Cardoso, V.V; Benoliel, M.J.; Cardoso, E.; Coelho, M.R.; Martins, A.; Almeida, C.M.M., 2021. Screening and seasonal behavior of analgesics, non-steroidal anti-inflammatory drugs, and antibiotics in two urban wastewater treatment plants. Environmental Management, v. 68 (3), 411-425. https://doi.org/10.1007/s00267-021-01496-5.

Silva, G.M.; Garcia, J.A.; Garrita, J.A.; Cunha, D.G.F.; Finkler, N.R.; Mendiondo, E.M.; Ghiglieno, F., 2022. Smartphone-based spectrometry system as a prescreening assessment of copper and iron for real time control of water pollution. Journal of Environmental Management. Journal of Environmental Management, v. 323, 116214. https://doi.org/10.1016/j.jenvman.2022.116214.

União Europeia (UE), Diretiva da União Europeia 2020/2184. Diretiva 2020/2184 do Parlamento Europeu e do Conselho de 16 de dezembro de 2020 relativa à qualidade da água destinada ao consumo humano (reformulação). Jornal Oficial da União Europeia, 435/1-435/62.

von Mühlen, L.; Prestes, O.D.; Ferrão, M.F.; Sirtori, C., 2022. Miniaturized method for chemical oxygen demand determination using the PhotoMetrix PRO Application. Molecules, v. 27 (15), 4721. https://doi.org/10.3390/molecules27154721.

Yadav, P.; Laddha, H.; Agarwal, M.; Gupta, R., 2022. Fun with smartphones: handy solution for quantification of debilitating fluoride ions in drinking water. Journal of Chemical Education tv. 815, 1-8. https://doi.org/10.1021/acs.jchemed.2c00216.

Zheng, S.; Li, H.; Fang, T.; Bo, G.; Yuan, D.; Ma, J., 2022. Towards citizen science. On-site detection of nitrite and ammonium using a smartphone and social media software. Science of Total Environment v. 815, 1-8. https://doi.org/10.1016/j.scitotenv.2021.152613.